Introduction

Dear user,

This manual provides the user of the Spierings Crawler SK2418-R van with information concerning the crawler's construction, function and operation. Also detailed, technical descriptions and maintenance instructions are given in the maintenance section of this manual.

SPIERINGS MOBILE CRANES

P.O. Box 24
5340 AA OSS
The Netherlands

Merwedestraat 15
5347 KZ OSS
The Netherlands
Fax +31 412 67 12 20

Phone number daytime: +31 412 69 77 77
Phone number evening time: +31 655 78 24 85
www.spieringscranes.com

Liability clause

This liability clause was added to prevent possible miscommunication.

ARTICLE 1. USE

The Spierings Crawler may only be used for the designated purpose, and in the manner as laid down/described in the manual and possible additions thereto.

Any other than the designated use and/or any other manner of operation than laid down/described in this manual and possible additions thereto, and/or action inconsistent with the previous, will explicitly invalidate any guarantee claim as well as any liability for damage, consequential damage and future damage, by any reason and for no matter what.

Operating the Spierings Crawler is only permitted by people, who have the relevant expertise, and who are physically and mentally capable of properly carrying out the work involved.

In case of the additions to the manual, the user/operator/driver of the Spierings Crawler must be notified thereof immediately, and the additions must be added to the manual.

ARTICLE 2. SAFETY

For safety reasons, the user/operator/driver must strictly comply with the instructions in the manual and possible additions thereto.

The user/operator/driver must keep strictly to the lifting specifications as indicated on the Spierings Crawler /crane, in the manuals and the additions thereto.

If at any work site of the Spierings Crawler /crane the safety rules and regulations are more strict than those laid down in the manual, or possible additions thereto, these stricter rules are to be complied with under penalty of expiry of the guarantee and with exclusion of every liability.

The Spierings Crawler manufacturer explicitly warns the user/operator/driver and/or bystanders, to stay out of the Spierings Crawler / crane's danger zone. If any unexpected situation, by whatever cause, occurs during use and/or operation of the Spierings Crawler, please contact your technical department or Spierings Service immediately.

ARTICLE 3. WARRANTY

Without previous written permission of the Spierings Crawler manufacturer, it is forbidden to carry out modifications and/or welding at or on the Spierings Crawler.

Systematic maintenance and periodic inspections must be carried out according to the manual and possible additions thereto.

Deviating from these instructions without prior written consent of the Spierings Crawler manufacturer 's, turns every guaranty claim invalid as well as every liability for damage, consequential damage and future damage, by any reason and for no matter what.

Explanation of the used symbols


Information!


Wear safety glasses!


Wear safety gloves!


Wear safety shoes!


Wear a helmet!


Wear a safety harness!


Check / test!


Incorrect!


Good!


Conditions


Toxic substances!


Dangerous for hands!


Do not come in turning radius!


Corrosive substances!


Electric voltage!


Environmental hazard!


Caution!


Danger of slipping!


Entrapment hazard!


Fire hazard!

Table of contents

1. General data

The crawler is especially designed for the Spierings SK2418-R folding crane. Extra attention is paid to a safe and comfortable transport to the work site. The crane is equipped with a counterweight and tools. The stability of the crawler creates a good crane support.

Picture 1-1 shows the measurements of the SK2418-R (see also picture in the Annexes).
The measurements given are the overall dimensions and turning circle.

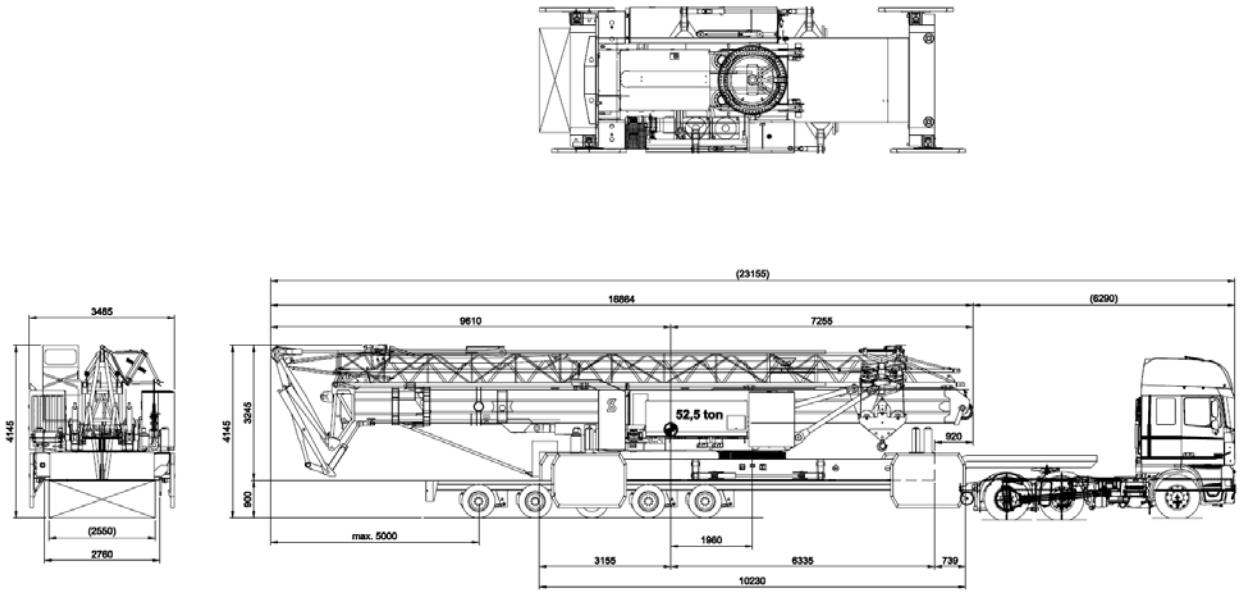

Picture 1-1

1.1. Dimensions and weights

- Length: 16.86 m (crawler only); 23.15 m including flatbed trailer;
- Width: 3.48 m;
- Height: 3.24 m (crawler only); 4.15 m including flatbed trailer;
- Mass: approx. 84,500 kg (crane with counterweight).

1.2. Drive line

- Driven by the diesel engine superstructure.

1.3. Braking system

- Parking brake.

1.4. 4-Point outrigger system

- Full outrigger support base (wide): 8.14 m x 7.66 m;
- Reduced outrigger support base (narrow): 8.14 m x 5.88 m.

2. Introduction to the crawler

2.1. Get to know the crawler

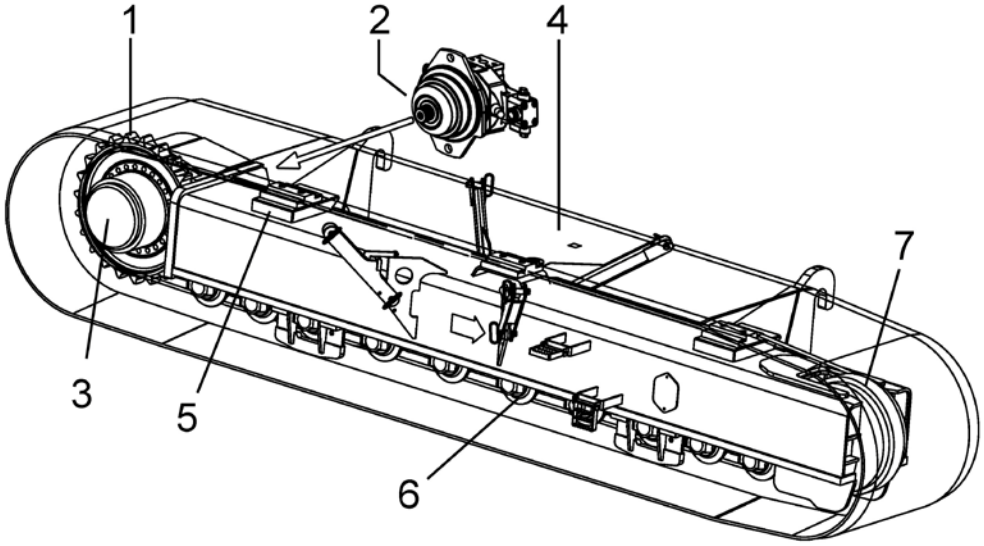

Picture 2-1

1. Toothed wheel;
2. Hydraulic oil motor;
3. Planetary gearbox;
4. Track;
5. Support guide;
6. Rollers;
7. Guide wheel with tensioner.

2.2. Keys

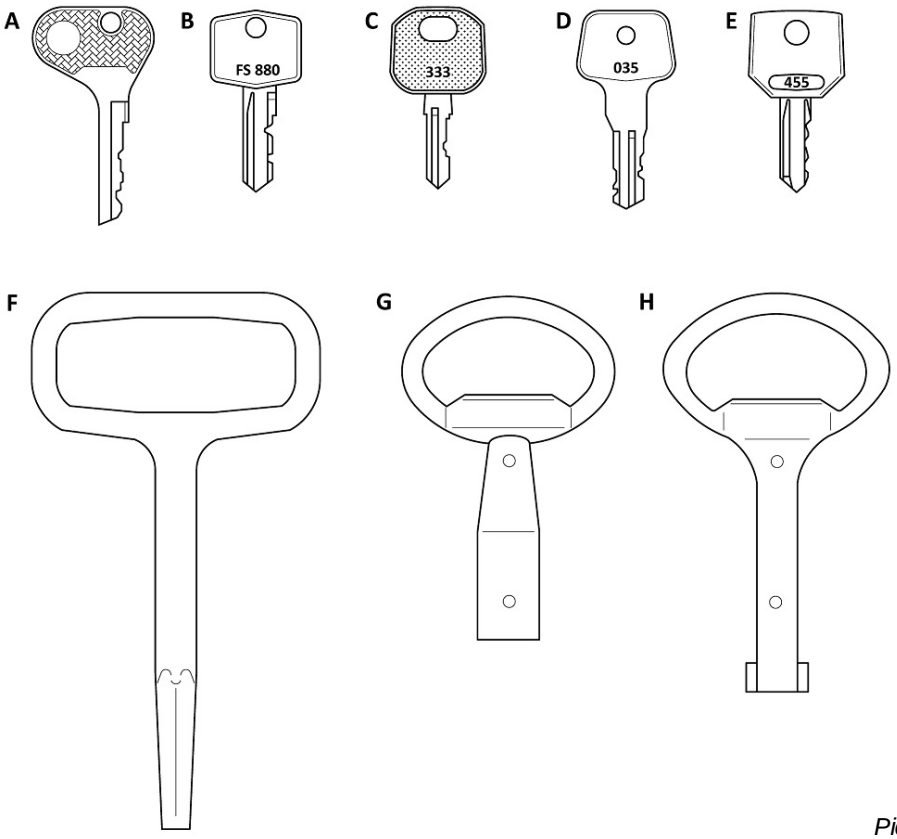

Picture 2-2

A. Ignition key crane;
B. Key hatch crane cab;
C. General key:
   - Electrical cabinet;
   - Control panel control cabinet;
D. Key fuel tank;
E. Key operated selector switch:
   - Key operated selector switch full / reduced outrigger base;
   - Key operated selector switch emergency control lift on / off;
   - Key operated selector switch emergency control lift up / down;
F. Cross key:
   - (Sliding) doors rear toolbox;
G. Cross key engine cowling crane:
   - Doors engine cowling crane;
H. Cross key control cabinet crawler:
   - Control cabinet crawler (for the benefit of outrigger base).

2.3. Outriggers

At both sides of the crawler there are two extending *outrigger beams A* each (*Picture 2-3*), and to each beam a hydraulically operated *outrigger (F)*. These outriggers keep the machine stable during hoisting operations.

The outrigger beams have an *antiskid coating* (*D)* to prevent slipping.
The outriggers can be operated by using the remote outrigger control.

For more information, see *Crane manual, Chapter 5. Crane set-up*.

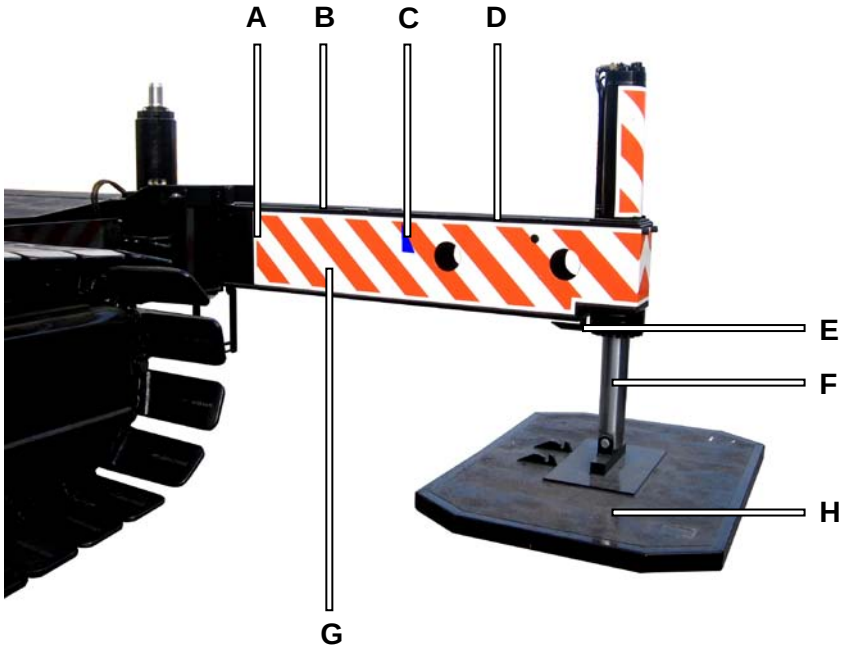

Picture 2-3

A. Tag triangle full outrigger support base;
B. Reinforcement plate;
C. Tag triangle reduced outrigger support base;
D. Antiskid coating;
E. Transport support;
F. Outrigger (cylinder);
G. Outrigger beam;
H. Outrigger plate.

Both outrigger beams at the rear of the crawler are equipped with a spirit level.

2.4. Storage box

The storage box is located on the left side of the crawler in the vicinity of outrigger A (see *Picture 2-4*) and can be opened by means of a cross key.
The charger and the remote control for the crane and outriggers are located in the left-hand compartment. In the right-hand compartment the emergency control unit is located.

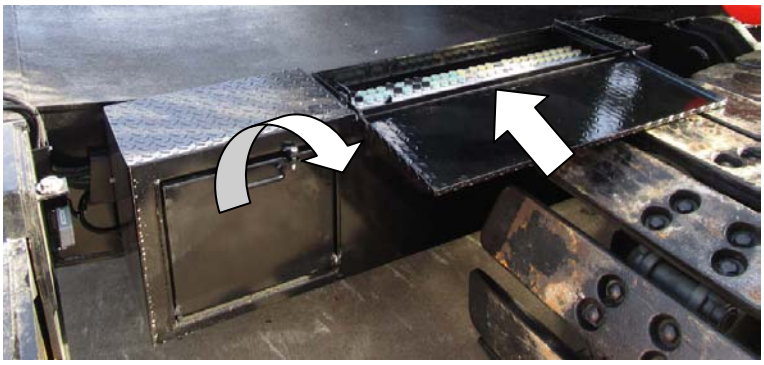

Picture 2-4

2.5. Electrical cabinet crawler

The electrical cabinet of the crawler is located in the vicinity of outrigger B. On the right-hand side of the cabinet, the switch for outriggering and the connection for the emergency control unit are located (see *Picture 2-5*).

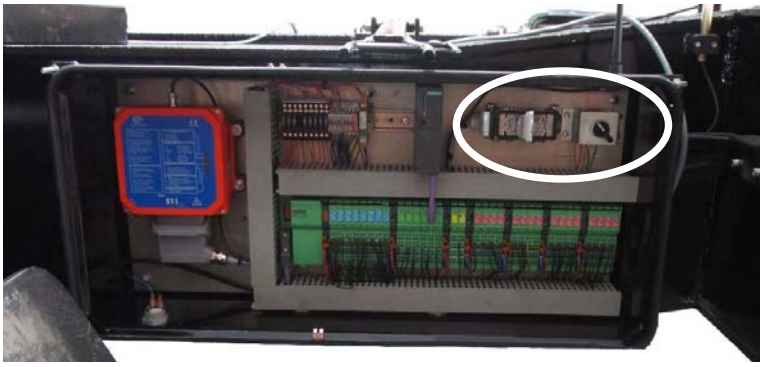

Picture 2-5

2.6. Rear toolbox crawler (optional)

The rear toolbox can be opened by using the cross key. The toolbox has of two doors (at left and right side, see *Picture 2-6*).

Picture 2-6

2.7. Ladder crawler

In order to climb safely on the crane platform (e.g. to access the lift), a ladder is mounted in the centre of the rear of the crawler (see *Picture 2-7*) :

1. Lift the ladder on the right side approx. 10 cm. upwards and rotate the ladder 90° clockwise;
2. Lower the ladder;
3. Attach the hook of the ladder in the mounting eye on the crawler;
4. Controleer of de ladder correct is bevestigd;
5. Accessing the crane platform is now possible.

Picture 2-7

If a rear toolbox is mounted, the ladder is located at the right-hand side of the crawler.

3. Operating the crawler

3.1. Emergency control unit

The emergency control unit is located in het storage box in het vicinity of outrigger A (see right-hand arrow in *Picture 3-1*).

3.2. Battery chargers for remote control crane and remote control outriggers

For each remote control there are two batteries included.

The battery chargers for the remote controls of the crane and the outriggers are located in the storage box in the vicinity of outrigger A (see left-hand arrow in *Picture 3-1*).

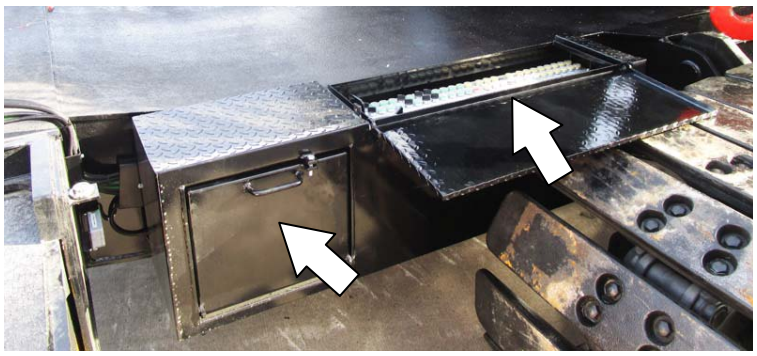

Picture 3-1

The batteries are charged at any time:

- If a battery is charged, the *indicator A* (*Picture 3-2*) of the corresponding charger lights;
- When a battery is fully charged, the indicator of the corresponding charger flashes.

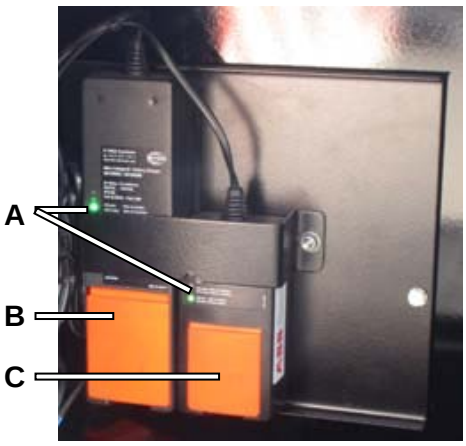

Picture 3-2

A. Indicators;
B. Battery (charger) remote control crane;
C. Battery (charger)remote control outriggers.

4. Drive line

4.1. Drive overview

On the superstructure, a diesel engine is mounted, which directly drives three hydraulic pumps:

- One pump (hydraulic pump 1) for the lifting movement and the crawler drive 1;
- One pump (hydraulic pump 2) for the rotating movement and the crawler drive 2;
- One *load-sensing* pump (hydraulic pump 3) for i. a. the trolley movement, the erection- and folding process and the drive of the generator for various electrical functions.

The engine also drives an alternator, which recharges the batteries.
The 24 Volt output of the battery is used for the entire electric control of the crane.

To get an impression of the whole drive system of the crane, see *Picture 4-1*.

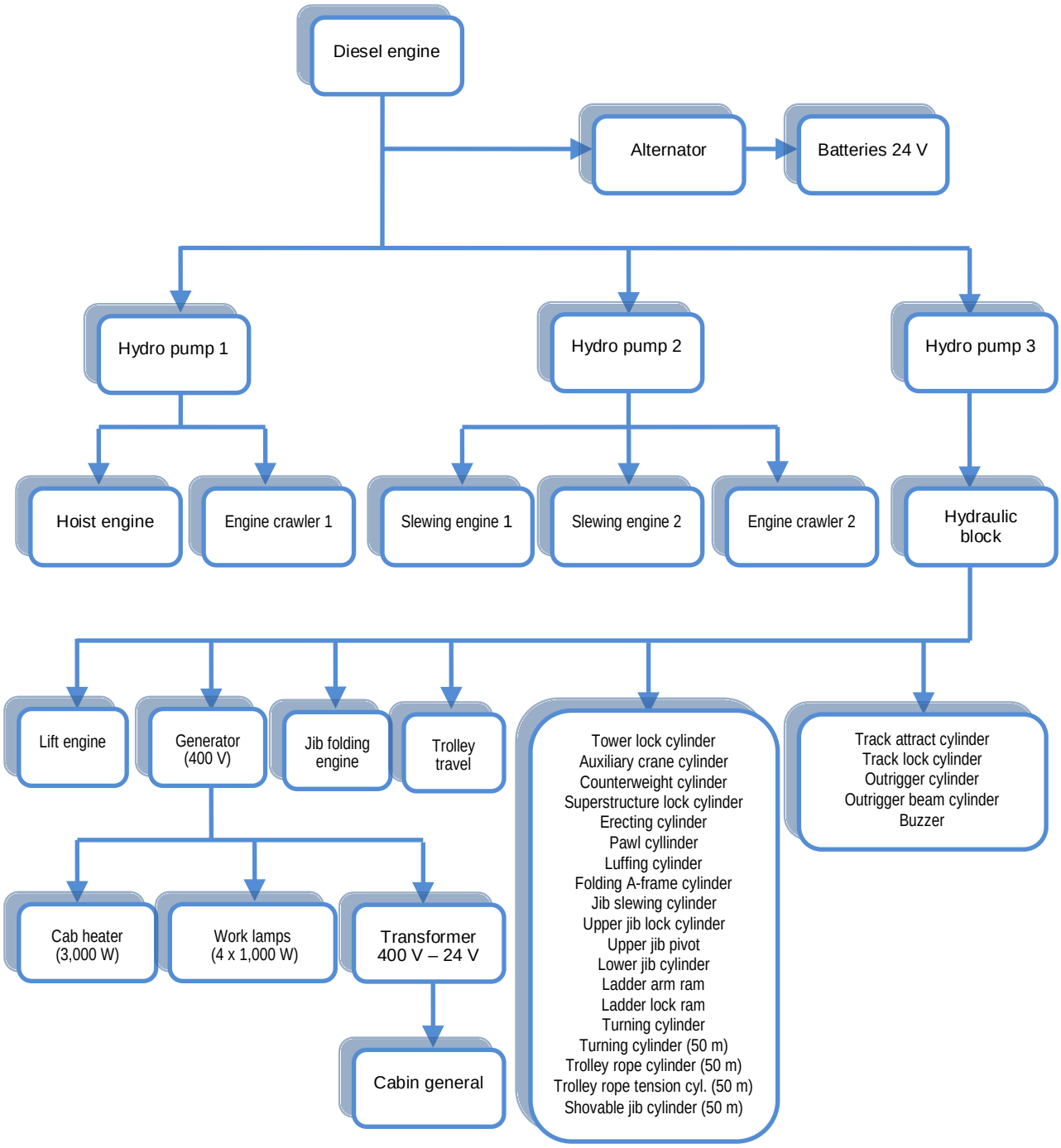

Picture 4-1

4.2. Track drive

The crawler drive of the crane consists of two independently driven tracks.

These tracks are individually driven by a hydraulic oil motor (see *Picture 4-2*, *2*).

Via a gearbox (*3*) with a toothed wheel (*1*), the track (*4*) is set in motion.

The track drive is equipped with a parking brake.

In *Picture 4-2* the main parts of the track are displayed.

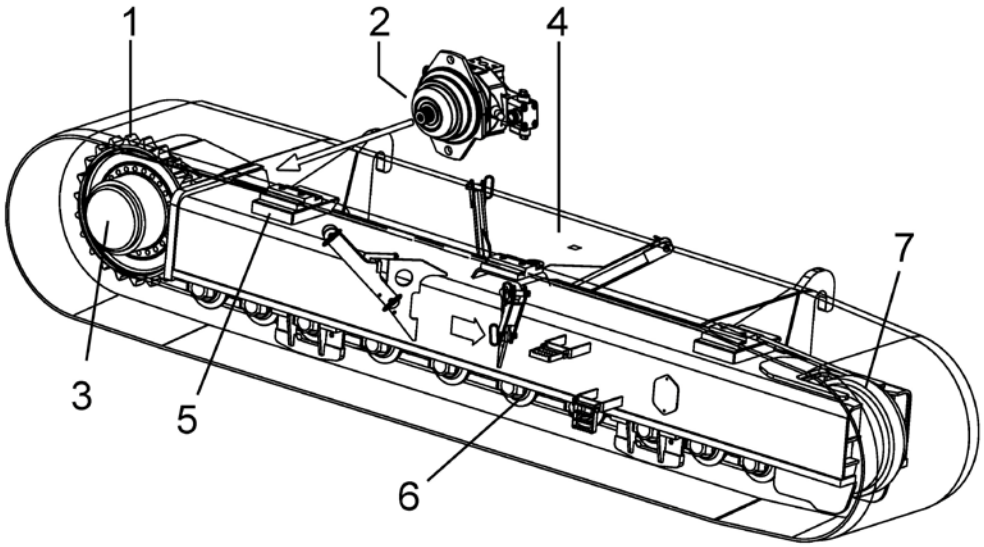

Picture 4-2

1. Toothed wheel;
2. Hydraulic oil motor;
3. Planetary gearbox;
4. Track;
5. Support guide;
6. Rollers;
7. Guide wheel with tensioner.

5. Driving

It is possible to drive the crawler if:

- The crane is fully erected, or;
- The tower is in its vertical position, the superstructure is locked, the jibs are folded en are next to each other and the counterweight is mounted.

This last option is only permitted if the conditions in *§ 5.1.1. Conditions for driving with an erected tower* are met.

5.1. Driving with an erected tower

Driving with an erected tower means driving with a fully unfolded crane.

CAUTION!

Spierings Mobile Cranes advises only to drive with an erected tower, when the regular unfolding and folding is not possible because of abnormal conditions (e.g. on a small construction site).

CAUTION!

- ***Driving with an erected tower* is a risky act, which is exclusively carried out by the own responsibility of the driver;**
- **A possible risk is unforeseen instability which may result to a falling unfolded crane. Align this risk with the responsible person on the working site!**
- ***Driving with an erected tower* may only be carried out by skilled, qualified and trained personnel;**
- **Check if there are no persons on or around the crane while driving with an erected tower;**
- **Inform all relevant persons clearly.**

5.1.1. Conditions for driving with an erected tower

CAUTION!

Driving with an erected tower **is allowed, but only under the following very strict conditions.**
If one or more conditions cannot be met, then it is STRICTLY FORBIDDEN to drive with an erected tower!

CONDITIONS

- **At least one qualified and trained person gives instructions during the moving of the crane:**
  - **Communicate clear signs and signals in advance;**
- **The wind force is NOT higher than wind force 3 Bft (5.4 m/s);**
- **While driving the erected crane, it is prohibited to be in the crane cab;**
- **The superstructure is locked, with the jib over the front of the crawler (*Picture 5-1, 1*);**
- **The counterweight must be mounted;**
- **The tower parts must be locked;**
- **The jib is in horizontal position, so not 30° luffed (*Picture 5-1, 1*);**
- **The crane is mounted halfway, thus not fully erected:**
  only the intermediate tower is extended (*Picture 5-1*);
- **The jib has a maximum length of 42 m (*Picture 5-1*, *1*);**
- **There may be NO LOAD in the hoisting hook (*Picture 5-1, 2*);**
- **The trolley and the hoisting block are positioned as shown in *Picture 5-1, 3*;**
- **Switch *Track driving* on the cabinet (*Picture 6-4*) is set to *track driving*;**
- **The outrigger beams are all *fully extended*, approx. 7 cm above the ground:**
  - **Make sure the outriggers and outrigger plates touch no obstacles during the movement of the crane;**
- **The carriageway is levelled and paved, so the weight is evenly distributed on the wheels. Use road plates when driving on a soft soil;**
- **The maximum tilt of 2° may NOT be exceeded. At a tilt of 2° a warning will sound (double beep).**
  At a tilt of 3° the crawler stops, driving is not possible anymore (*Picture 5-3*);
- **The maximum permissible acceleration and deceleration is 1 m/s^2.**
  Accelerate and brake gradually;
- **The maximum permissible speed is 1.2 km/h (20 m/min).**

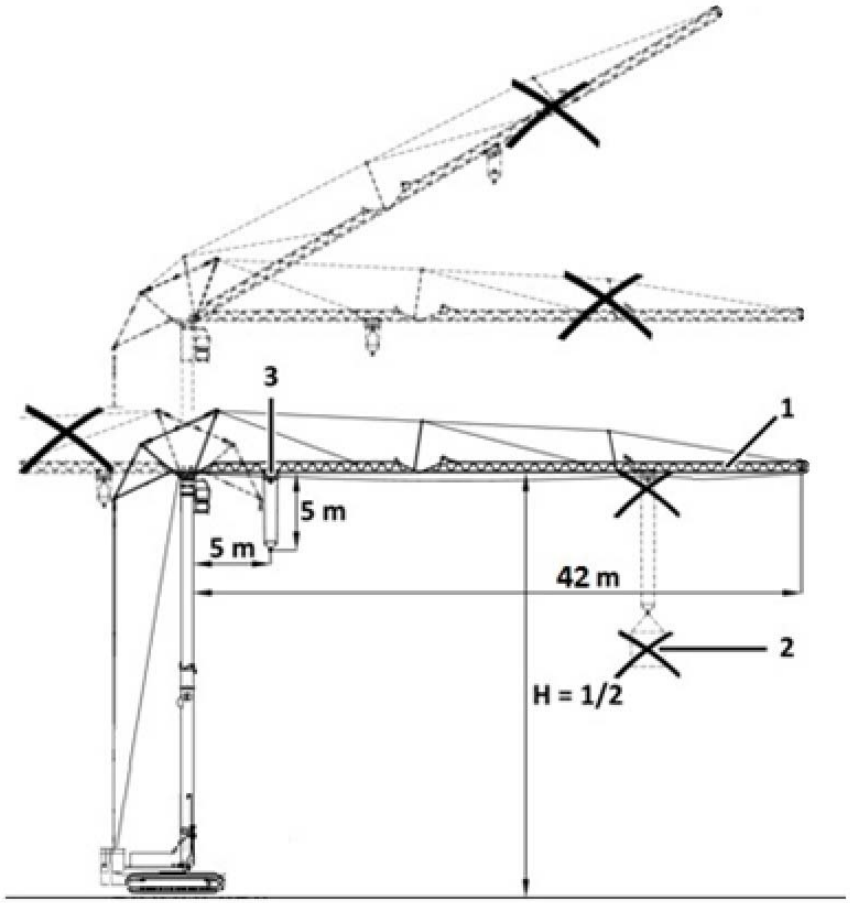

Picture 5-1

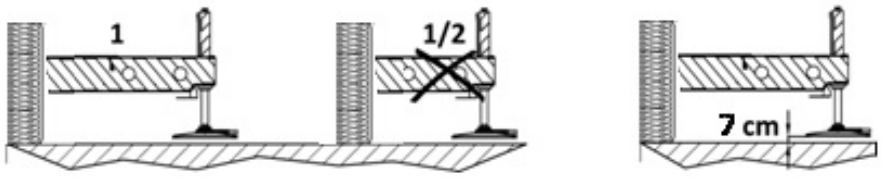

Picture 5-2

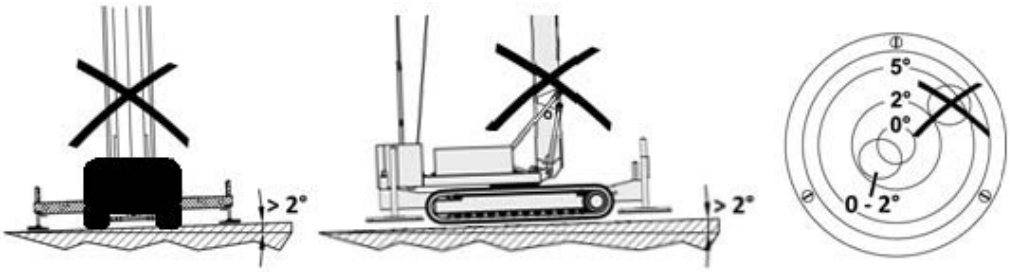

Picture 5-3

5.1.2. Instructions for driving with erected tower

CAUTION!

***Driving with erected tower* is a risky act, which is exclusively carried out under the own responsibility of the operator.**

The instructions are just meant to help the operator prepare driving with an erected tower.

Spierings Mobile Cranes is NOT responsible for missing instructions or unforeseen situations, which occur during driving with an erected tower.

Checking the carriageway and the new working site

1. Check if the carriageway is levelled:
   - The maximum permissible tilt of the crane is 2°;
2. Check if there are no sharp turns along the driving path;
3. Check if the load capacity of the soil is sufficient:
   - Are there no hollow spaces or pipes such as drains, embankments, wells, cellars etc.?
   - Is the soil hardened or are there suitable driving plates available?
   - Are there any transitions from hard to soft soil?
4. Check if there is enough space to drive with an erected tower:
   - Mind the width of the vehicle with the extended outriggers.

Checking the position / status of the crane

1. Check the current wind force on the *touch screen*:
   - The maximum permissible wind force is 3 Bft (5.4 m/s);
   - Compare the current value with the weather forecast;
   - The wind force may vary in time. Keep this in mind;
2. Check if the jib is in horizontal position (NOT 30° luffed):
   - If not, unluff the jib to the horizontal position;
3. Check if there is no load in the hoisting hook;
4. Check if the maximum jib length is 42 m;
5. Move in/out the trolley until it is situated 5 metres from the tower:
   - Hoist or lower the hoisting block until it is 5 metres below the jib;
   - Lock the superstructure, where the jib is positioned over the front of the crawler:
     - Check if the superstructure is properly locked;
6. Check if the outrigger beams are all fully extended (*full outrigger support base*);
7. Check if the outrigger support plates are approx. 7 cm above the ground.

5.2. Track driving

CAUTION!

***Driving with erected tower* is allowed, but only under the following very strict conditions (see *§ 5.1.1. Conditions for driving with an erected tower*).**
If one or more conditions cannot be met, then it is FORBIDDEN to drive with an erected crane!

For track driving, the followings operations must be carried out:

1. Turn the selector switch G (*Picture 5-4*) to *Crawler*;

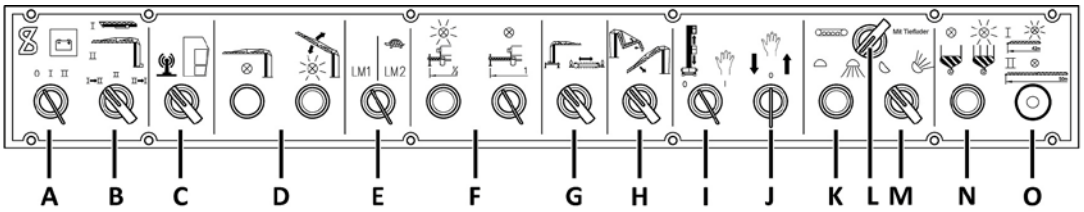

Picture 5-4

2. Turn on the remote control and press the start button;
3. Operate the left joystick of the remote control:
   - Slewing: move to the left or to the right (see *Picture 5-5*, yellow arrow A);
   - Trolley travelling: move forward or backward (see *Picture 5-5*, blue arrow B);

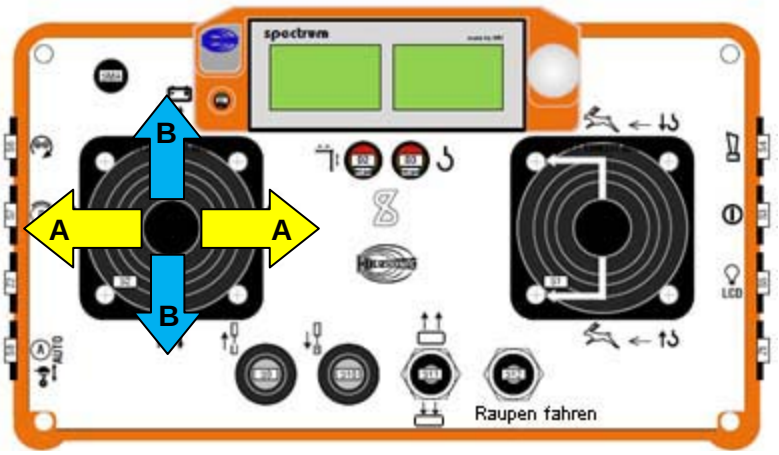

Picture 5-5

4. Turn off the remote control when the correct position has been reached;
5. Turn the selector switch G (*Picture 5-4*) back to *Crane.*

6. Maintenance crawler

INFORMATION!

Spierings Mobile Cranes guarantees the service life of the crawler, only if the maintenance schedule has been followed.

Maintain the crawler according the prescribed maintenance schedules.

For more information, see *Chapter 7. Maintenance tracks.*

Carry out a daily visual inspection. The timely identification of leakage, problem or deviation may prevent serious problems.

The service intervals should preferably be carried out in a well-equipped workshop.

INFORMATION!

For more specifications, see *Chapter 7. Maintenance tracks.*

CAUTION!

Inspections and/or changes must be written down in the Crane's Logbook.

6.1. General maintenance track drive

Decisive for the service life of the drive is the purity of the hydraulic oil.

Spierings Mobile Cranes recommends to test the hydraulic oil for pollution 1x per year or after 1,500 hours.

During work in a small space, it is sometimes necessary to outrigger the crane first.

CHECK / TEST!

Check daily the hydraulic connections for leakage.

CHECK / TEST!

Check daily the track drive (before starting work) for damage, excessive noise and/or pollution, so that the operation remains guaranteed.

CAUTION!

Make sure no water gets in the electrical components when cleaning with a pressure washer.

6.2. Hydraulic oil motor

CHECK / TEST!

Check the hydraulic oil motor daily for external leakage. Especially in the area of the seal with the gearbox.

The hydraulic oil motor is self-lubricating and therefore maintenance-free.
It is lubricated by hydraulic oil leak.

6.3. Gearbox

CHECK / TEST!

Check the gearbox daily for leakage.

6.3.1. Checking oil level gearbox and topping up

CHECK / TEST!

Check the oil level in the gearbox every 3 months.

CAUTION!

After a long drive the oil may be hot!

1. Make sure the crawler stands on a flat surface;
2. Position the track so, that the *drain plug 2* (vertically seen) is in the lowest position (on 6 o'clock) (see *Picture 6-1*). The *filler plug 1* will then be on the left or right side at on 10 o'clock or 2 o'clock;

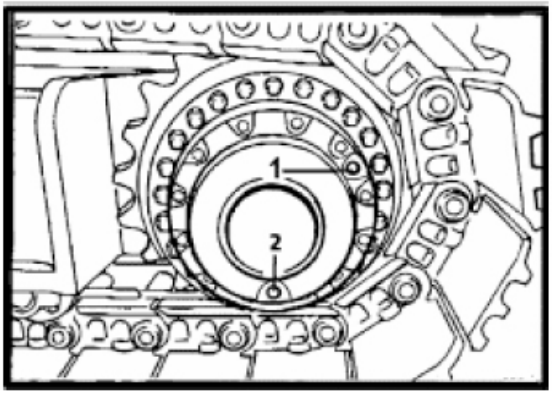

Picture 6-1

3. Top up oil via the filler neck on the edge;
4. Screw the filler plug with a new sealing ring in the filler opening.

6.3.2. Refreshing oil gearbox

INFORMATION!

Refresh oil of the gearbox at least every year (under normal operating conditions).

CAUTION!

After a long drive the oil may be hot!

1. Make sure the crawler stands on a flat surface;
2. Position the track so, that the *drain plug 2* (vertically seen) is in the lowest position (on 6 o'clock) (see *Picture 6-2*). The *filler plug 1* will then be on the left or right side at on 10 o'clock or 2 o'clock;

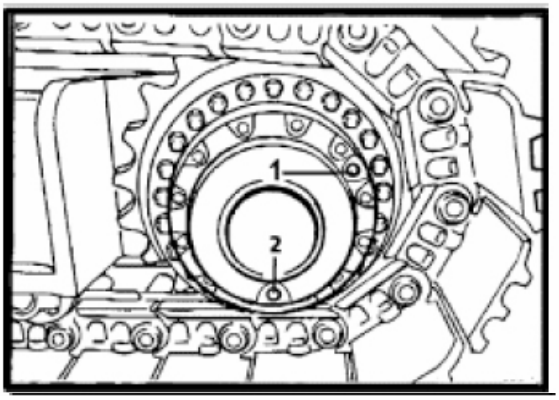

Picture 6-2

3. Place a suitable tray under the drain point;
4. Remove the drain plug (2);
5. Clean the drain plug and provide it with a new sealing ring;
6. Mount the drain plug and remove the filler plug (1);
7. Fill with oil up to the edge of the filling opening (approx. 8 litres);
8. Screw the filler plug with a new sealing ring in de filling opening.

6.3.3. Parking brake

The gearbox is equipped with a parking brake. The maintenance-free parking brake consists of a number of discs, which are continuously pressed against one another by compression springs. Hydraulic pressure opens the brake, so that the track drive can be moved.
The parking brake is designed as an independent unit and should only be removed if the entire unit is replaced. Repairs to the parking brake may only be performed by specialists.

6.4. Tracks

CHECK / TEST!

Optically check the tracks daily for wear (under normal operating conditions).

Wear of the track is mainly caused by the movement and friction of the track on the ground.

Wear is worsened by the following causes:

- The track rests / moves on a rough, hard surface such as a rock bottom;
- Unilateral load during rotation of the crawler;
- Reversed driving over long distances;
- Driving over obstacles;
- Driving with the wrong tension of the track;
- Excessive pollution of the track parts.

The parts of the track must be replaced when worn, so that serious damage in the drive can be avoided.

Components in the work area must be free of dirt.

Carry out the measurements of wear on various parts.

The degree of wear is determined by the part that is most worn, thus not by the average wear.

6.5. Guide wheel with tensioner

CAUTION!

Work and maintenance of the (pre-tensioned) spring united should only be performed by trained professionals!

CHECK / TEST!

Check daily the spring unit of the track optically on significant presence of dirt.

The guide wheel with tensioning device is shown in *Picture 6-3*. The tensioning device consists of two parts, a spring unit (tensioned) (3) and a track tensioner (4).

The tensioning device protects the track drive from exposure to environmental factors, such as dirt and irregularities during the movement of the crawler. The spring can only function properly if there is no dirt on the spring element.

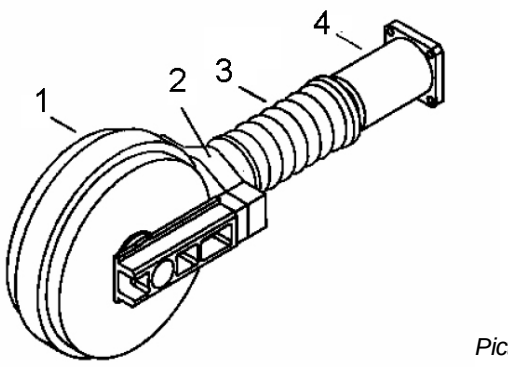

Picture 6-3

1. Guide wheel;
2. Fork;
3. Spring unit (pre-tensioned);
4. Track tensioning device.

The guide wheel with spring tensioner is provided with a life time lubrication.
The track tensioner provides the track drive with the required pre-tension.
As a result of wear and tear by certain conditions of the terrain, it may be necessary to adjust the tension of the track.

6.5.1. Determining play in track

CAUTION! ENTRAPMENT HAZARD!

During this work, you are in the hazardous area of the crane and there is a risk of entrapment, because the outriggers suddenly retract.

Make sure that there are no unauthorized persons in the vicinity of the (remote) controls!

CHECK / TEST!

Check weekly for play in the track relative to the drive.

It is important to check the play in the track relative to the drive:

A. Consequences when too little play between the track and the drive:

- A track which is tensioned too tight causes excessive wear and tear of the guide wheel and the bearing of the drive;
- The fuel consumption will increase, because the hydraulic oil motor requires more power as a result of increasing friction.

B. Consequences when too much play between the track and the drive:

- The track with too much play may shift, or detach from the edge of the guide rollers and get damaged.

In order to determine the play in the track, the following procedure must be carried out (carry out for both tracks):

1. Outrigger the crane in such a way, that the track does not touch the ground anymore. The play in the track becomes visible by the own weight of the track (*Picture 6-4*), so that the track hangs downward;
2. Determine distance X (the space between the thread of the toothed wheels and the thread of the track, see *Picture 6-4*);

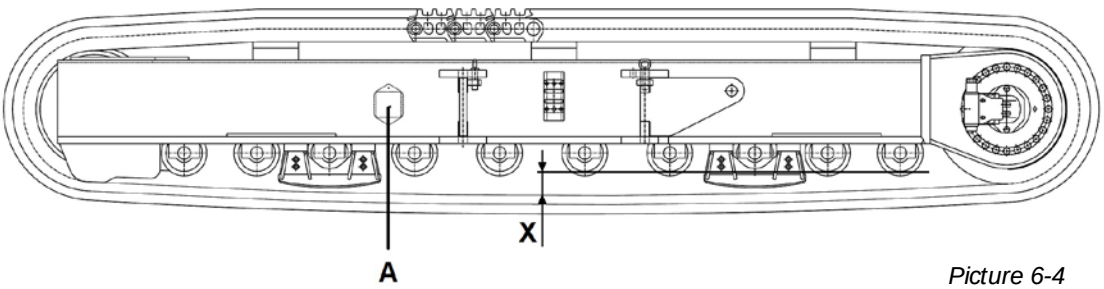

Picture 6-4

3. Distance X shall have a value of 8 - 12 cm: in case the value deviates from distance X, then the tension of the track should be adjusted (see *§ 6.5.2. Adjusting tension of the track*).

6.5.2. Adjusting tension of the track

CAUTION! ENTRAPMENT HAZARD!

During this work, you are in the hazardous area of the crane and there is a risk of entrapment, because the outriggers suddenly retract.

Make sure that there are no unauthorized persons in the vicinity of the (remote) controls!

If the measured value X of the previous paragraph is higher than the prescribed value, then the track must be tightened.

To tension the track, the following operations must be carried out:

1. Outrigger the crane in such a way, that the track does not touch the ground anymore;
2. Remove cover plate A (see *Picture 6-4*), by loosening the two screws;
3. Before tightening the track, check if the track is properly placed in the drive;
4. Attach the hose of a grease gun to the connection of the track tension device (see *Picture 6-5*). Fill out as much grease until the correct tension of the track is reached (see *§ 6.5.1. Determining play in track*);

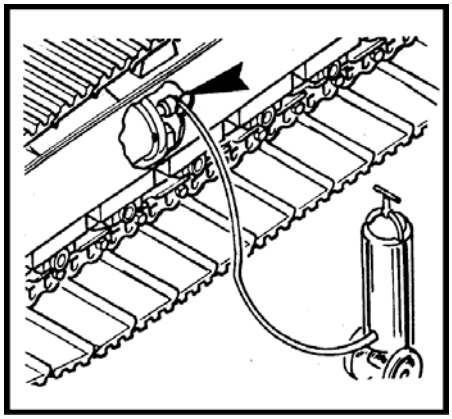

Picture 6-5

5. Retract the outriggers, so that the track gradually touches the ground;
6. Drive the crane forward, so the track makes at least one complete revolution;
7. Mount the cover plate using the two screws;
8. If desired, carry out this procedure on the other track on the other side.

If the measured value X of the previous paragraph is lower than the prescribed value, then the track must be slacken (see *§ 6.5.3. Slackening of the track*).

6.5.3. Slackening of the track

To slacken the track, the following operations must be carried out:

1. Outrigger the crane in such a way, that the track does not touch the ground anymore;
2. Remove cover plate A (see *Picture 6-4*), by loosening the two screws;
3. Before slackening the track, check if the track is properly placed in the drive;
4. Open *grease nipple 2* in *Picture 6-6* halfway so the grease comes out of the opening, until the track has the correct tension (see *§ 6.5.1. Determining play in track*);

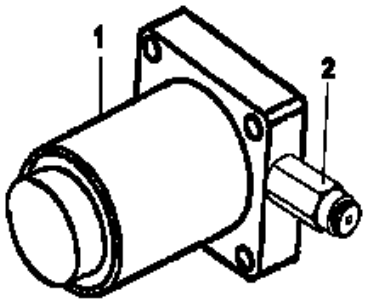

Picture 6-6

5. Close the grease nipple again;
6. Retract the outriggers, so that the track gradually touches the ground;
7. Drive the crane forward, so the track makes at least one complete revolution;
8. Mount the cover plate using the two screws;
9. If desired, carry out this procedure on the other track on the other side.

6.6. Support guide

The support guide of the track consists of three metal sliding jaws per side, which are fitted as a complete set.

In case of damage or wear, the whole set must be replaced (*Picture 6-7*).

The support guide has the following functions:

- Guiding the track;
- Preventing the track from slacken.

The support guide is hardened, which reduces wear.

The sliding jaws are maintenance-free.

6.7. Rollers

The track drive (*Picture 6-7*) has 10 rollers per side. These rollers are fitted as a complete set.
In case of damage or wear, the whole set must be replaced.
The rollers have the following functions:

- Guiding the track, so dynamic forces are passed away via the ground;
- Absorbing the forces during crane operation.

The rolling surfaces of the guide are hardened, which reduces wear.
The rollers are maintenance-free:

- To prevent pollution and oil spills, the bearing is provided with special seals.

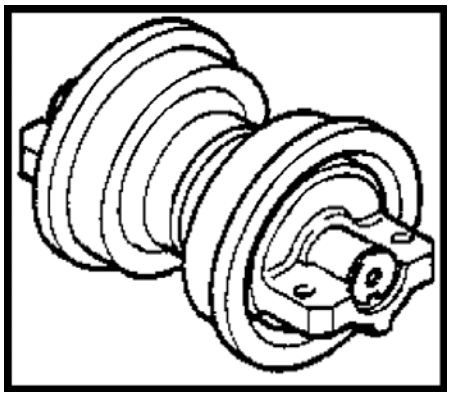

Picture 6-7

6.8. Long-term parking / garaging

If the vehicle is parked or stored for a long time during winter, there is a risk of freezing water which has been accumulated in the tower of the crane.
Therefore put the vehicle in uphill position so the water can flow away:

1. Put the crane on reduced outrigger support base;
2. Erect the crane (the jib is stretched);
3. Mount the counterweight to the undercarriage;
4. Then fully fold the jib;
5. Fully retract the tower (the tower remains in its vertical position):
   - The water in the tower can now flow away.

7. Maintenance tracks

This chapter discusses the maintenance of various components.

C = Check

X = Refresh / replace

7.1. Track drive

Maintenance	1st crane inspection	Daily	Monthly	3-Monthly	500 hrs/ ½-yearly	1500 hrs/ yearly
Hydraulic oil						C
Hydraulic connections for leakage		C				
Track drive for damage and dirt		C				

Table 7-1

7.2. Hydraulic oil motor

Maintenance	1st crane inspection	Daily	Monthly	3-Monthly	500 hrs/ ½-yearly	1500 hrs/ yearly
Hydraulic oil motor for leakage		C				

Table 7-2

7.3. Gearbox

Maintenance	1st crane inspection	Daily	Monthly	3-Monthly	500 hrs/ ½-yearly	1500 hrs/ yearly
Gearbox for leakage		C				
Oil level				C		
Oil refreshing						X

Table 7-3

7.4. Track

Maintenance	1st crane inspection	Daily	Monthly	3-Monthly	500 hrs/ ½-yearly	1500 hrs/ yearly
Track optically for wear		C				

Table 7-4

7.5. Guide wheel with tension device

Maintenance	1st crane inspection	Daily	Monthly	3-Monthly	500 hrs/ ½-yearly	1500 hrs/ yearly
Spring unit for dirt	C					
Play in the track		C				

Table 7-5

8. Annexes

TAB 1 **Drawings**

TAB 2 **Hydraulic scheme**

TAB 3 **Electric scheme**

TAB 4 **(empty)**

TAB 5 **(empty)**

TAB 6 **(empty)**

TAB 7 **(empty)**

TAB 8 **(empty)**

TAB 9 **(empty)**

TAB 10 **(empty)**